इंटरनेट मानक

Disclosure to Promote the Right To Information

Whereas the Parliament of India has set out to provide a practical regime of right to information for citizens to secure access to information under the control of public authorities, in order to promote transparency and accountability in the working of every public authority, and whereas the attached publication of the Bureau of Indian Standards is of particular interest to the public, particularly disadvantaged communities and those engaged in the pursuit of education and knowledge, the attached public safety standard is made available to promote the timely dissemination of this information in an accurate manner to the public.

"जानने का अधिकार, जीने का अधिकार"
Mazdoor Kisan Shakti Sangathan
"The Right to Information, The Right to Live"

"पुराने को छोड नये के तरफ"
Jawaharlal Nehru
"Step Out From the Old to the New"

IS 9422 (1989): Symbols for ships' bulbous bow and side thruster [TED 17: Shipbuilding]

"ज्ञान से एक नये भारत का निर्माण"
Satyanarayan Gangaram Pitroda
"Invent a New India Using Knowledge"

Act Number 22 of 2005
The Indian Parliament
RIGHT TO INFORMATION

Made Available By
Public.Resource.Org

"ज्ञान एक ऐसा खजाना है जो कभी चुराया नहीं जा सकता है"
Bhartṛhari—Nītiśatakam
"Knowledge is such a treasure which cannot be stolen"

BLANK PAGE

BRUTUM FULMEN

IGNORANTIA JURIS NON EXCUSAT

PROTECTED BY COPYRIGHT

IS 9422 : 1989
(Reaffirmed 2004)

Indian Standard

SHIPS' BULBOUS BOW AND SIDE THRUSTER — SYMBOLS

(First Revision)

भारतीय मानक

जहाज के गोलाकार बो और पार्श्व थ्रस्टर — चिन्ह

(पहला पुनरीक्षण)

UDC 629·12·011·762 : 003·62

© BIS 1990

BUREAU OF INDIAN STANDARDS
MANAK BHAVAN, 9 BAHADUR SHAH ZAFAR MARG
NEW DELHI 110002

February 1990 **Price Group 1**

FOREWORD

This Indian Standard (First Revision) was adopted by the Bureau of Indian Standards on 23 May 1989, after the draft finalized by the Shipbuilding Sectional Committee had been approved by the Transport Engineering Division Council.

This standard was first published in 1980. The symbol for side thruster has undergone a change and this revision has been necessitated to incorporate the latest symbol for side thruster.

In the preparation of this standard, considerable assistance has been derived from ISO 6050 : 1987 'Shipbuilding — Bulbous bow and side thruster symbols', issued by the International Organization for Standardization (ISO).

Indian Standard

SHIPS' BULBOUS BOW AND SIDE THRUSTER — SYMBOLS

(First Revision)

1 SCOPE

This standard specifies the symbols for bulbous bow and side thruster to be used on ships' hulls to indicate their presence.

2 GENERAL

2.1 Symbols and Dimensions

2.1.1 The symbols and their dimensions shall be as given in Fig. 1 and 2.

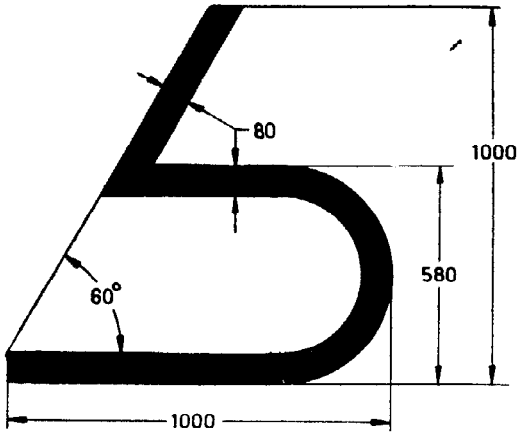

All dimensions in millimetres.

FIG. 1 SYMBOL FOR BULBOUS BOW

2.1.2 Where larger symbols are to be used, the proportion of dimensions as indicated in Fig. 1 and 2 shall be retained.

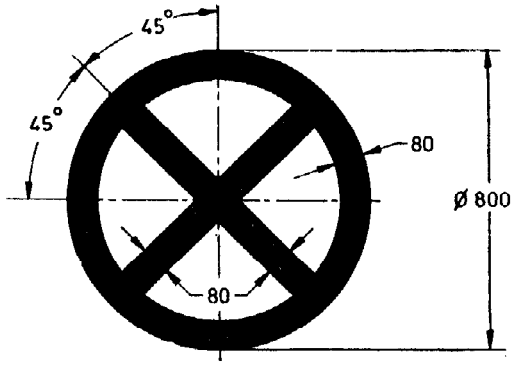

All dimensions in millimetres.

FIG. 2 SYMBOL FOR SIDE THRUSTER

2.2 Location

2.2.1 The symbols for the bulbous bow shall be located at the forward end of the ship on both port and starboard side in a clearly visible place above the maximum draught level and pointing in the direction of the bow.

2.2.2 The symbol for the side thruster shall be located on both port and starboard side above the maximum draught level and as far as possible on the vertical line passing through the centre of each side thruster.

2.3 Paint

The outline of the symbols shall be of welded beads and painted in a colour contrasting with the background shell painting of the ship.

Standard Mark

The use of the Standard Mark is governed by the provisions of the *Bureau of Indian Standards Act, 1986* and the Rules and Regulations made thereunder. The Standard Mark on products covered by an Indian Standard conveys the assurance that they have been produced to comply with the requirements of that standard under a well defined system of inspection, testing and quality control which is devised and supervised by BIS and operated by the producer. Standard marked products are also continuously checked by BIS for conformity to that standard as a further safeguard. Details of conditions under which a licence for the use of the Standard Mark may be granted to manufacturers or producers may be obtained from the Bureau of Indian Standards.

Bureau of Indian Standards

BIS is a statutory institution established under the *Bureau of Indian Standards Act, 1986* to promote harmonious development of the activities of standardization, marking and quality certification of goods and attending to connected matters in the country.

Copyright

BIS has the copyright of all its publications. No part of these publications may be reproduced in any form without the prior permission in writing of BIS. This does not preclude the free use, in the course of implementing the standard, of necessary details, such as symbols and sizes, type or grade designations. Enquiries relating to copyright be addressed to the Director (Publications), BIS.

Revision of Indian Standards

Indian Standards are reviewed periodically and revised, when necessary and amendments, if any, are issued from time to time. Users of Indian Standards should ascertain that they are in possession of the latest amendments or edition. Comments on this Indian Standard may be sent to BIS giving the following reference :

Doc : No. TED 017 (0708)

Amendments Issued Since Publication

Amend No.	Date of Issue	Text Affected

BUREAU OF INDIAN STANDARDS

Headquarters:

Manak Bhavan, 9 Bahadur Shah Zafar Marg, New Delhi 110002
Telephones : 331 01 31, 331 13 75

Telegrams : Manaksanstha
(Common to all Offices)

Regional Offices:	Telephone
Central : Manak Bhavan, 9 Bahadur Shah Zafar Marg NEW DELHI 110002	331 01 31 331 13 75
Eastern : 1/14 C. I. T. Scheme VII M, V. I. P. Road, Maniktola CALCUTTA 700054	37 86 62
Northern : SCO 445-446, Sector 35-C, CHANDIGARH 160036	2 18 43
Southern : C. I. T. Campus, IV Cross Road, MADRAS 600113	41 29 16
Western : Manakalaya, E9 MIDC, Marol, Andheri (East) BOMBAY 400093	6 32 92 95

Branches : AHMADABAD. BANGALORE. BHOPAL. BHUBANESHWAR. COIMBATORE. FARIDABAD. GHAZIABAD. GUWAHATI. HYDERABAD. JAIPUR. KANPUR. PATNA. TRIVANDRUM.

Printed at Printograph, Delhi, India